REV:	DESCRIPTION	BY	DATE
V1.0	New issue		

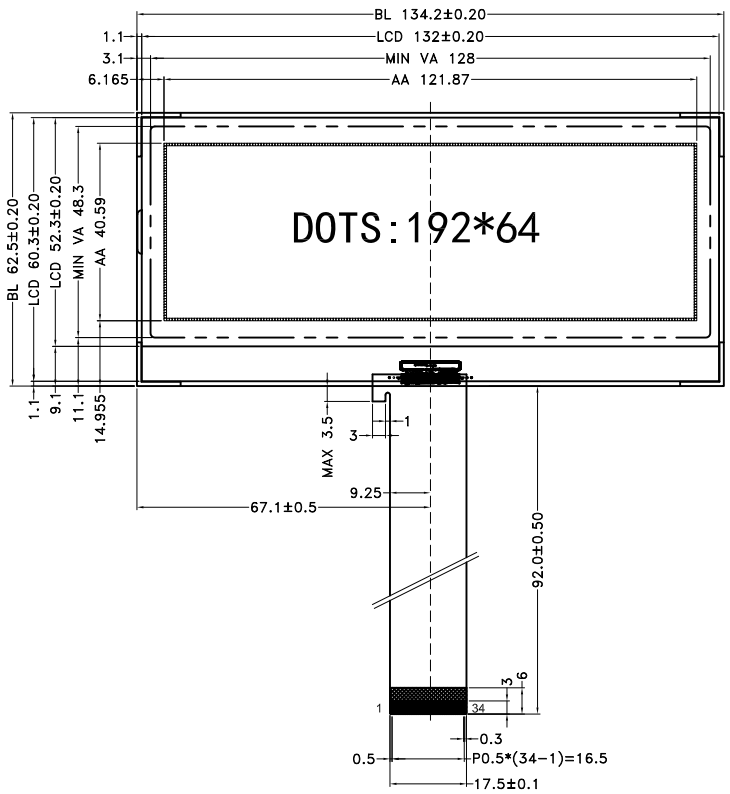

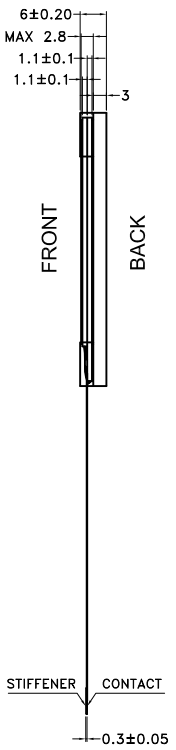

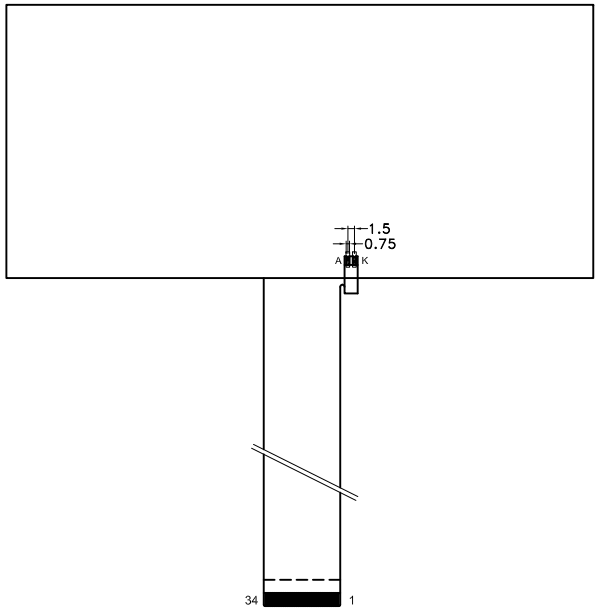

PIN	SYMBOL
1	LED+
2	LED+
3	LED−
4	LED−
5	VLCD
6	VS+
7	VS+
8	VS−
9	VS−
10	VB0−
11	VB1−
12	VB1+
13	VB0+
14	VDD
15	VDD
16	VSS
17	VSS
18	BM0
19	CS0
20	CD
21	WR1
22	WR0
23	RST
24	D0
25	D1
26	D2
27	D3
28	D4
29	D5
30	D6
31	D7
32	D8
33	D13
34	D15

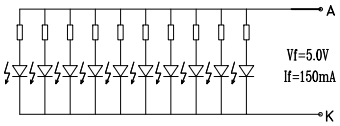

BACKLIGHT CIRCUIT
10PCS WIHTE LEDS

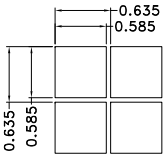

DOTS SIDE
SCALE: 20:1

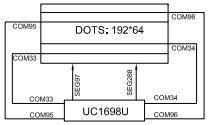

LCD LAYOUT

NOTES :

1. LCD TYPE: FSTN Positive Transflective
2. OPERATING VOLTAGE: VDD=3.3V,Vop=15.0V
3. VIEWING DIRECTION: 6 O'CLOCK
4. DRIVE METHOD: 1/64 Duty,1/9 Bias
5. OPERATING TEMP: -20°C TO +70°C
6. STORAGE TEMP: -30°C TO +80°C
7. CONNECTOR TAPE: COG+FPC
8. DRIVER IC: UC1698 or Equivalent
9. BACKLIGHT: 10PCS White LED
10. ALL sub-parts and materials of the parts,must comply with the RoHS instructions of EU.

SHEET: 1 of 1

APPROVALS		DATE
DWN	SD-03	2016-08-10
CHK		
APP	SD-11	2016-08-10

SINDA DISPLAY TECHNOLOGY CO., LTD.

MODEL NUMBER : SDGG19264-08

VERSION: 1.0

GENERAL TOL:± 0.2

UNITS: MM

DO NOT SCALE THIS DRAWING.

www.sindadisplay.com

SCALE: 1:1